PARAGON

TECHNICAL DATA SHEET

Broomhouse Lane Edlington
DN12 1ES United Kingdom
paragonproduct.co.uk

PUG437

PA: 320MM CHAMBER BASE 3 INLET

Product Information

ISSUE 1 - December 2025

The Paragon range of underground pipe, fittings and ancillaries is suitable for non-pressure foul and surface water disposal, and is ideal for round the house drainage applications, new build and refurbishment or replacement of existing drains. Pipe and most fittings are manufactured from PVC-U, with some fittings manufactured from Polypropylene.

Product Details

Colour	Size	Bend Radius	Standards	Origin
Black	320mm x 110mm	0	–	GB

Product Dimentions

	H (mm)	W (mm)	D (mm)	Weight (kg)
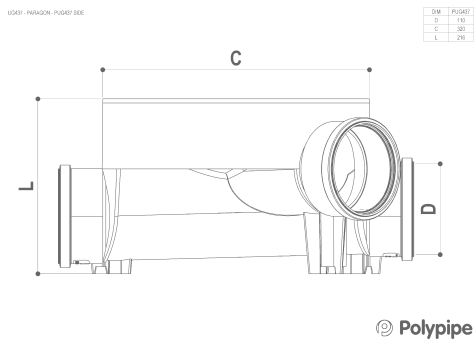	442	380	215	1.431

*All dimensions stated are in millimetres (mm)